V Series Air Treatment Units

Ordering Code VU Series FR.L Combination

V U - 1/4 - □ - □ - MINI - □

- V U: Filter+Regulator+Lubricator
- Port Size: G1/8″ G1/4″ G3/8″ G1/2″ G3/4″ G1″
- Precision: Blank: 25μm; 5M: 5μm
- Pressure Gauge: Blank: 12bar; 7: 7bar
- MINI: Body with 40mm; MIDI: Body with 55mm; MAXI: Body with 66mm
- Condensate Drain: Blank: Turned Manually; A: Fully automatic



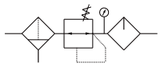

Specifications

Specifications	MINI			MIDI			MAXI	
Port Size	G1/8″	G1/4″	G3/8″	G3/8″	G1/2″	G3/4″	G3/4″	G1″
Materials Information	Housing: Zinc die-casting; Filter bowl and oil: PC; Metal bowl guard: Aluminium alloy; Sealing: NBR; Adjusting knob: POM							
Working Medium	Compressed air							
Mounting Type	Pipe mounting or Leg mounting							
Assembly Position	Vertical ±5°							
Min.Standard Nominal Flow Rate	3L/min			6L/min			10L/min	
Capacity of Condensate Fluid	22ml			43ml			80ml	
Primary Pressure: Turned Manually	0.1~1.6MPa							
Primary Pressure: Fully automatic	0.15~1.2MPa							
Working Pressure	0.05~1.2MPa/0.05~0.7MPa							
Precision	40μm/5μm							
Working Temperature Range	0~60℃							

Standard Rated Flow

Joint Size		G1/8″	G1/4″	G3/8″	G3/8″	G1/2″	G3/4″	G3/4″	G1″
MINI	VU-...(-A)	700	1000	1200	–	–	–	–	–
	VU-...-5M-...(-A)	800	1300	1500	–	–	–	–	–
	VU-...-7-(-A)	600	850	1050	–	–	–	–	–
MIDI	VU-...(-A)	–	–	–	2000	2600	2600	–	–
	VU-...-5M-...(-A)	–	–	–	2000	2800	2800	–	–
	VU-...-7-(-A)	–	–	–	1700	1800	2100	–	–
MAXI	VU-...(-A)	–	–	–	–	–	–	3800	4800
	VU-...-5M-...(-A)	–	–	–	–	–	–	5000	5200
	VU-...-7-(-A)	–	–	–	–	–	–	3600	3800

IS09001 CE
VPC PNEUMATIC®

V Series Air Treatment Units

Internal Structure

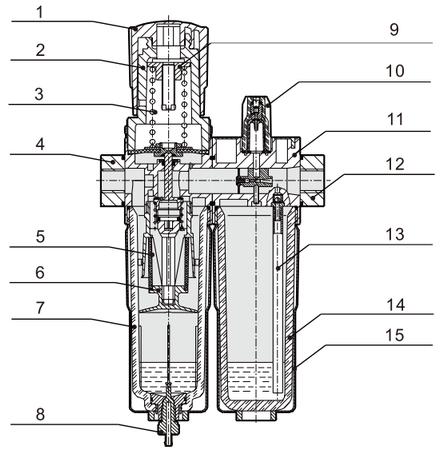

NO.	Item	Material
1	Pressure knob	POM
2	Regulator cap	POM
3	Pressure spring	SWC
4	Flange-IN	Zinc alloy
5	Filter element	Brass
6	Manger	POM
7	Metal bowl guard	Aluminium alloy
8	Condensate drain	POM
9	Adjusting spindle	S35C
10	Upper glass	PC
11	OL body	Zinc alloy
12	Flange-OUT	Zinc alloy
13	Oil tube	PU
14	Lubricator bowl	PC
15	Metal bowl guard	Aluminium alloy
	O-Ring	NBR

Main Dimensions

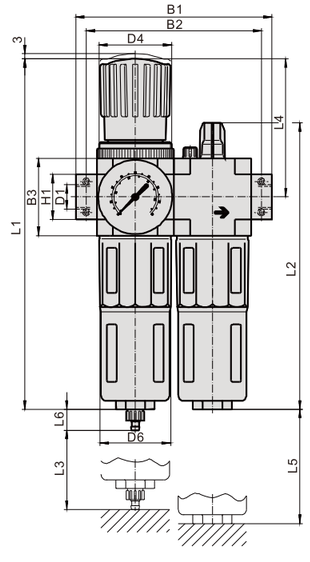

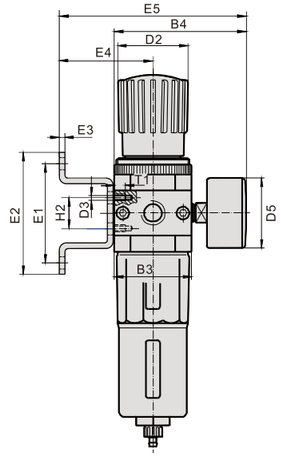

Turned Manually

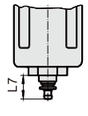

Fully automatic

Model	B1	B2	B3	B4	D1	D2	D3	D4	D5	D6	L1	L2	L3	L4	L5	L6	L7	H1	H2	E1	E2	E3	E4	E5
VU-MINI-1/8″	104	92	40	76	G1/8"	40	M4	M36*1.5	Φ40	Φ38	193	169	60	69	100	15	19	20	11	35	44	2	39	95
VU-MINI-1/4″	104	92	40	76	G1/4"	40	M4	M36*1.5	Φ40	Φ38	193	169	60	69	100	15	19	20	11	35	44	2	39	95
VU-MINI-3/8″	104	92	40	76	G3/8"	40	M4	M36*1.5	Φ40	Φ38	193	169	60	69	100	15	19	20	11	35	44	2	39	95
VU-MIDI-3/8″	140	125	55	93	G1/8"	55	M5	M52*1.5	Φ52	Φ52	250	206	80	97	120	15	19	32	22	60	71	3	47	112
VU-MIDI-1/2″	140	125	55	93	G1/2"	55	M5	M52*1.5	Φ52	Φ52	250	206	80	97	120	15	19	32	22	60	71	3	47	112
VU-MIDI-3/4″	140	125	55	93	G3/4"	55	M5	M52*1.5	Φ52	Φ52	250	206	80	97	120	15	19	32	22	60	71	3	47	112
VU-MAXI-3/4″	162	146	66	104	G3/4"	66	M5	M36*1.5	Φ63	Φ65	252	223	90	80	150	15	19	32	22	60	71	3	52	123
VU-MAXI-1″	182	157	66	104	G1	66	M5	M36*1.5	Φ63	Φ65	252	223	90	80	150	15	19	40	22	60	71	3	52	123

V Series Air Treatment Units

Ordering Code VFR Series F.R Combination

V FR -1/4 - □ - □ - MINI - □

- Port Size: G1/8″ G1/4″ G3/8″ G1/2″ G3/4″ G1″
- Filter+Regulator
- Precision: Blank: 40μm 5M: 5μm
- Pressure Gauge: Blank: 0.5-12bar 7: 0.5-7bar
- MINI: Body with 40mm MIDI: Body with 55mm MAXI: Body with 66mm
- Condensa… Blank: Turne… A: Fully auto… sate Drain …ned Manually …utomatic



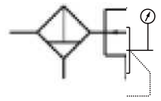

Specifications

Specifications		MINI			MIDI			MAXI	
Port Size		G1/8″	G1/4″	G3/8″	G3/8″	G1/2″	G3/4″	G3/4″	G1″
Materials Information		Housing: Zinc die-casting; Filter bowl and oil: PC; Metal bowl guard: Aluminium alloy; Sealing: NBR; Adjusting knob: POM							
Working Medium		Compressed air							
Mounting Type		Pipe mounting or foot mounting							
Assembly Position		Vertical ±5°							
Features of Structure		Sintered filter with water separator; MINI/MIDI: Diaphragm type regulator; MAXI: Piston regulator; Direct constant-density lubricator。							
Primary Pressure	Turned Manually	0.1~1.6MPa							
	Fully automatic	0.15~1.2MPa							
Working Pressure		0.05~1.2MPa/0.05~0.7MPa							
Working Temperature Range		0~60℃							
Precision		40μm/5μm							
Capacity of Condensate Fluid		22ml			43ml			80ml	

Standard Rated Flow

Joint Size		G1/8″	G1/4″	G3/8″	G3/8″	G1/2″	G3/4″	G3/4″	G1″
MINI	VFR-...-D-	750	1400	1600	–	–	–	–	–
	VFR-...-D-7-...	900	1500	1700	–	–	–	–	–
	VFR-...-D-5M-...	650	120	1350	–	–	–	–	–
MIDI	VFR-...-D-	–	–	–	3100	3400	3400	–	–
	VFR-...-D-7-...	–	–	–	3200	3900	4000	–	–
	VFR-...-D-5M-...	–	–	–	2400	2600	2600	–	–
MAXI	VFR-...-D-	–	–	–	–	–	–	9700	10000
	VFR-...-D-7-...	–	–	–	–	–	–	10000	11000
	VFR-...-D-5M-...	–	–	–	–	–	–	7600	8000

IS09001 CE
VPC PNEUMATIC®

V Series Air Treatment Units

Internal Structure

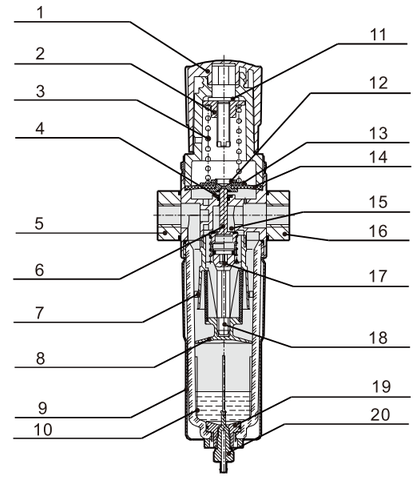

NO.	Item	Material
1	Pressure knob	POM
2	Regulator nut	S35C
3	Pressure spring	SWC
4	One part of membrane	PA6+G15
5	Flange-IN	Zinc alloy
6	Spool	Brass
7	Filter element	PE
8	Manger	POM
9	Metal bowl guard	Aluminium alloy
10	Filter bowl	PC
11	Wearing sheet	Insulation sheet
12	Sheet	NBR
13	One part of diaphragm	SPCC
14	Diaphragm	NBR+Nylon
15	OR Body	Zinc alloy
16	Flange-OUT	Zinc alloy
17	Fasteners	Brass
18	Filter element base	POM
19	Inner joint	POM
20	Condensate drain	POM
	O-ring	NBR

Main Dimensions

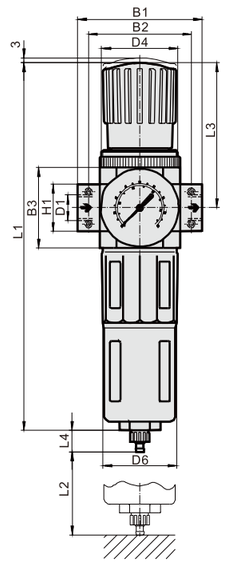

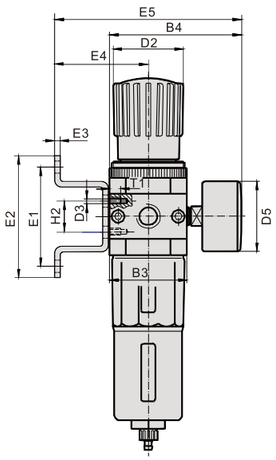

Turned Manually

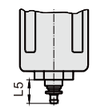

Fully automatic

Model	B1	B2	B3	B4	D1	D2	D3	D4	D5	D6	L1	L2	L3	L4	L5	H1	H2	E1	E2	E3	E4	E5
VFR-MINI-1/8″	64	52	40	76	G1/8"	Φ31	M4	M36*1.5	Φ40	Φ38	193	60	69	15	19	20	11	35	44	2	39	95
VFR-MINI-1/4″	64	52	40	76	G1/4"	Φ31	M4	M36*1.5	Φ40	Φ38	193	60	69	15	19	20	11	35	44	2	39	95
VFR-MINI-3/8″	64	52	40	76	G3/8"	Φ31	M4	M36*1.5	Φ40	Φ38	193	60	69	15	19	20	11	35	44	2	39	95
VFR-MIDI-3/8″	85	70	55	93	G1/8"	Φ50	M5	M52*1.5	Φ52	Φ52	250	80	97	15	19	32	22	60	71	3	47	112
VFR-MIDI-1/2″	85	70	55	93	G1/2"	Φ50	M5	M52*1.5	Φ52	Φ52	250	80	97	15	19	32	22	60	71	3	47	112
VFR-MIDI-3/4″	85	70	55	93	G3/4"	Φ50	M5	M52*1.5	Φ52	Φ52	250	80	97	15	19	32	22	60	71	3	47	112
VFR-MAXI-3/4″	96	80	66	104	G3/4"	Φ31	M5	M36*1.5	Φ63	Φ65	252	90	80	15	19	32	22	60	71	3	52	123
VFR-MAXI-1″	116	91	66	104	G1	Φ31	M5	M36*1.5	Φ63	Φ65	252	90	80	15	19	40	22	60	71	3	52	123

V Series Air Treatment Units

Ordering Code VF Series Filter

V F – 1/4 – □ – MINI – □

- Filter
- Port Size: G1/8″ G1/4″ G3/8″ G1/2″ G3/4″ G1″
- Precision: MINI: Body with 40mm; MIDI: Body with 55mm; MAXI: Body with 66mm
  - Blank: 40μm
  - 5M: 5μm
- Condensate Drain
  - Blank: Turned manually
  - A: Fully automatic



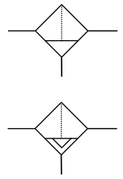

Specifications

Specifications		MINI			MIDI			MAXI	
Port Size		G1/8″	G1/4″	G3/8″	G3/8″	G1/2″	G3/4″	G3/4″	G1″
Working Medium		Clean air							
Precision		40μm/5μm							
Materials Information		Housing: Zinc die-casting; Filter bowl and oil: PC; Metal bowl guard: Aluminium alloy; Sealing: NBR; Adjusting knob: POM							
Medium Temperature		0~60℃							
Ambient Temperature		0~60℃							
Mounting Type		Pipe mounting or foot mounting							
Assembly Position		Vertical ±5°							
Features of Structure		Sintered filter with water separator							
Max.Condensate Capacity		22ml			43ml			80ml	
Primary Pressure	Turned manually	0-1.6Mpa							
	Fully automatic	0.15-1.2Mpa							
Weight		250g			700g			1340g	1440g

Standard Rated Flow

Joint Size		G1/8″	G1/4″	G3/8″	G3/8″	G1/2″	G3/4″	G3/4″	G1″
MINI	VF-...(-A)	1000	1200	1400	–	–	–	–	–
	VF-...-5M-...(-A)	800	950	1100	–	–	–	–	–
MIDI	VF-...(-A)	–	–	–	2700	3000	3000	–	–
	VF-...-5M-...(-A)	–	–	–	1800	2000	2000	–	–
MAXI	VF-...(-A)	–	–	–	–	–	–	5000	5300
	VF-...-5M-...(-A)	–	–	–	–	–	–	3600	3800

Note: The minimum flow required for normal operation is 5L/min

IS09001 CE
VPC PNEUMATIC®
V Series Air Treatment Units

Internal Structure

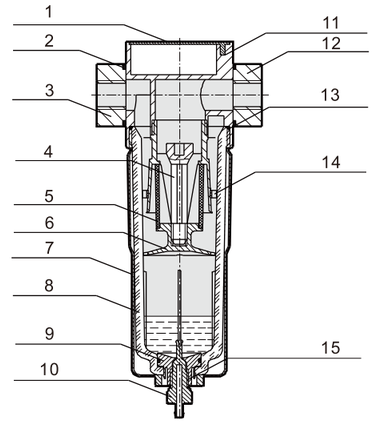

NO.	Item	Material
1	Ornament cover	POM
2	O-ring	NBR
3	Flange-IN	Zinc alloy
4	Filter element base	POM
5	Filter element	PE
6	Manger	POM
7	Metal bowl guard	Aluminium alloy
8	Filter bowl	PC
9	O-ring	NBR
10	Condensate drain	POM
11	OF Body	Zinc alloy
12	Flange-OUT	Zinc alloy
13	O-ring	NBR
14	Whirlwind impeller	POM
15	Inner joint	POM

Main Dimensions

With connecting plate

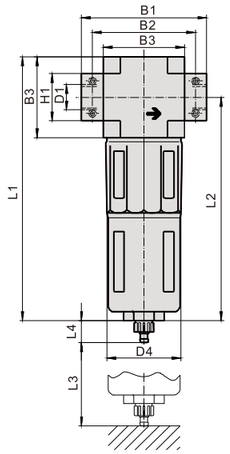

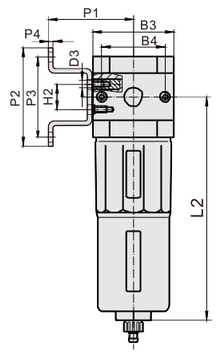

Without connecting plate

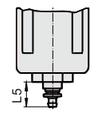

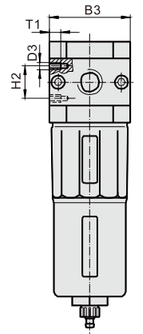

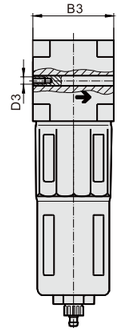

Model	B1	B2	B3	B4	D1	D3	D4	H1	H2	L1	L2	L3	L4	L5	P1	P2	P3	P4	T1
VF-MINI-1/8″	64	52	40	30	G1/8	M4	38	20	11	144	124	60	15	19	39	43	35	2	7
VF-MINI-1/4″	64	52	40	30	G1/4	M4	38	20	11	144	124	60	15	19	39	43	35	2	7
VF-MINI-3/8″	70	52	40	30	G3/8	M4	38	20	11	144	124	60	15	19	39	43	35	2	7
VF-MIDI-3/8″	85	70	55	43	G3/8	M5	52	32	22	179	151	80	15	19	47	70	60	3	8
VF-MIDI-1/2″	85	70	55	43	G1/2	M5	52	32	22	179	151	80	15	19	47	70	60	3	8
VF-MIDI-3/4″	85	70	55	43	G3/4	M5	52	32	22	179	151	80	15	19	47	70	60	3	8
VF-MAXI-3/4″	96	80	66	46	G3/4	M5	65	32	22	203	170	90	15	19	53	70	60	3	8
VF-MAXI-1″	116	91	66	46	G1	M5	65	40	22	203	170	90	15	19	53	70	60	3	8

V Series Air Treatment Units

Ordering Code VL Series Lubricator

VL - 1/4 - MINI

- VL: Lubricator
- 1/4: Port Size — G1/8″, G1/4″, G3/8″, G1/2″, G3/4″, G1″
- MINI: Body with 40mm; MIDI: Body with 55mm; MAXI: Body with 66mm



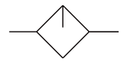

Specifications

Specifications	MINI			MIDI			MAXI	
Port Size	G1/8″	G1/4″	G3/8″	G3/8″	G1/2″	G3/4″	G3/4″	G1″
Working Medium	Clean air							
Max.Working Pressure	1.6MPa							
Min.Standard Nominal Flow Rate	3L/min			6L/min			10L/min	
Max.Condensate Capacity	22ml			43ml			80ml	
Max.Capacity of Oil cup	45ml			110ml			190ml	
Mounting Type	Pipe mounting or Leg mounting							
Medium Temperature	-10~60℃							
Ambient Temperature	-10~60℃							
Assembly Position	Vertical ±5°							
Materials	Housing: Zinc die-casting; Filter bowl and oil: PC; Metal bowl guard: Aluminium alloy; Sealing: NBR; Adjusting knob: POM							
Recommended oil	Turbine No1 Oil ISOVG32							
Features of Structure	The direct constant-density lubricator							
Weight	270g			630g			1100g	1200g

Standard Rated Flow

Joint Size	G1/8″	G1/4″	G3/8″	G3/8″	G1/2″	G3/4″	G3/4″	G1″
MINI	1300	2300	2700	–	–	–	–	–
MIDI	–	–	–	5500	6100	6300	–	–
MAXI	–	–	–	–	–	–	8400	9000

IS09001 CE

V Series Air Treatment Units

Internal Structure

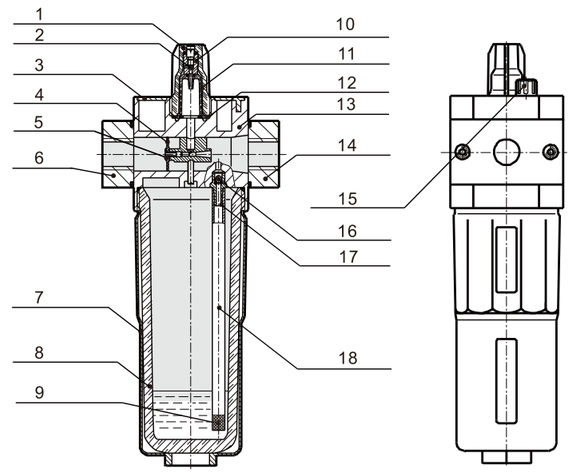

NO.	Item	Material
1	Upper glass	PC
2	Adjust screw	Brass
3	Ornament cover	PO
4	Windshield chip	NBR
5	Windshield base	Brass
6	Flange-IN	Zinc alloy
7	Metal bowl guard	Aluminium
8	Lubricator bowl	PC
9	Oil-filter plug	Brass powder sintered
10	Screw base	Brass
11	Oil dropping	PC
12	Seal piece	NBR
13	OL Body	Zinc alloy
14	Flange-OUT	Zinc alloy
15	Bleeder screw	POM
16	Steel ball	SUS304
17	Connection	POM
18	Oil tube	PU
–	O-ring	NBR

Main Dimensions

With connecting plate

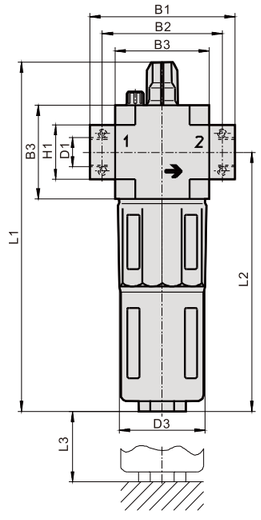

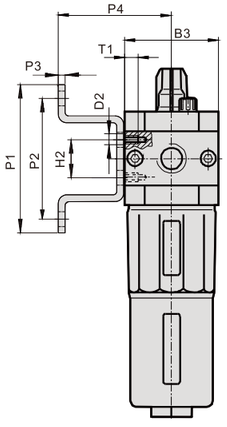

Without connecting plate

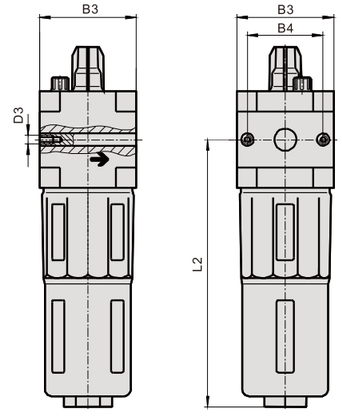

Model	B1	B2	B3	B4	D1	D2	D3	H1	H2	L1	L2	L3	P1	P2	P3	P4	T1
VL-MINI-1/8″	64	52	40	30	G1/8	M4	Φ38	20	11	169	124	100	44	35	2	39	7
VL-MINI-1/4″	64	52	40	30	G1/4	M4	Φ38	20	11	169	124	100	44	35	2	39	7
VL-MINI-3/8″	70	52	40	30	G3/8	M4	Φ38	20	11	169	124	100	44	35	2	39	7
VL-MIDI-3/8″	85	70	55	43	G3/8	M5	Φ52	32	22	204	151	120	71	60	3	47	8
VL-MIDI-1/2″	85	70	55	43	G1/2	M5	Φ52	32	22	204	151	120	71	60	3	47	8
VL-MIDI-3/4″	85	70	55	43	G3/4	M5	Φ52	32	22	204	151	120	71	60	3	47	8
VL-MAXI-3/4″	96	80	66	46	G3/4	M5	Φ65	32	22	228	170	150	71	60	3	53	8
VL-MAXI-1″	116	91	66	46	G1	M5	Φ65	40	22	228	170	150	71	60	3	53	8

V Series Air Treatment Units

Ordering Code VR Series Regulator

VR - 1/4 - □ - MINI

- VR: Regulator
- 1/4: Port Size — G1/8″, G1/4″, G3/8″, G1/2″, G3/4″, G1″
- □: Pressure Gauge — Blank: 0.5-12bar; 7: 0.5-7bar
- MINI: Body with 40mm; MIDI: Body with 55mm; MAXI: Body with 66mm



Specifications

Specifications		MINI			MIDI			MAXI	
Port Size		G1/8″	G1/4″	G3/8″	G3/8″	G1/2″	G3/4″	G3/4″	G1″
Working Medium		Compressed air							
Features of Structure		Sintered filter with water separator;MINI/MIDI:Diaphragm type regulator; MAXI:Piston regulator;Direct constant-density lubricator							
Mounting Type		Pipe mounting or foot mounting							
Assembly Position		Any							
Primary Pressure		0.1~1.6MPa							
Working Pressure		0.05~1.2MPa/0.05~0.7MPa							
Working Temperature Range		0~60℃							
Materials Information		Housing:Zinc die-casting;Filter bowl and oil;Polycarbonate; Metal bowl guard:Aluminium alloy;Sealing:NBR; Adjusting knob:POM							
Adjustment Range		0.05~0.7MPa							
		0.05~1.2MPa							
Weight	With pressure gauge	350g			720g			1200g	
	Without pressure gauge	300g			660g			1100g	

Standard Rated Flow

Joint Size		G1/8″	G1/4″	G3/8″	G3/8″	G1/2″	G3/4″	G3/4″	G1″
MINI	VR-...(0.05~0.7MPa)	1000	1600	1800	–	–	–	–	–
	VR-...(0.05~1.2MPa)	800	1500	1700	–	–	–	–	–
MIDI	VR-...(0.05~0.7MPa)	–	–	–	3300	4000	4500	–	–
	VR-...(0.05~1.2MPa)	–	–	–	3200	3500	3500	–	–
MAXI	VR-...(0.05~0.7MPa)	–	–	–	–	–	–	12000	12500
	VR-...(0.05~1.2MPa)	–	–	–	–	–	–	11000	11500

IS09001 CE
VPC PNEUMATIC®
V Series Air Treatment Units

Internal Structure

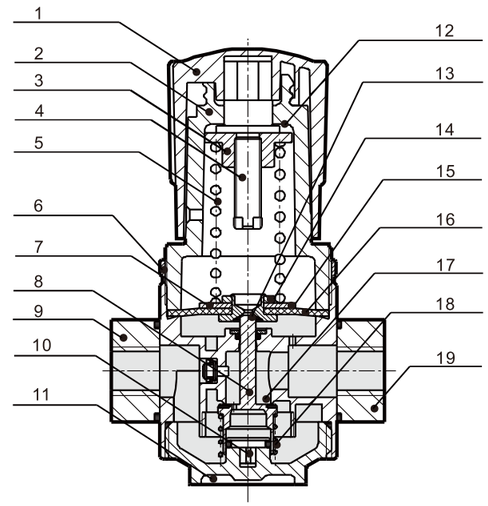

NO.	Item	Material
1	Pressure knob	POM
2	Regulator cap	POM
3	Regulator nut	S35C
4	Adjusting spindle	S35C
5	Pressure spring	SWC
6	Fixed ring	6061-T6
7	One part of membrane	PA6+G15
8	Flange-IN	Zinc alloy
9	Spool	Brass
10	Fasteners	Brass
11	Locker cover	Zinc alloy
12	Wearing sheet	Insulation sheet
13	Sheet	NBR
14	Overflow base	6061-T6
15	One part of diaphragm	SPCC
16	Diaphragm	NBR+Nylon
17	OR Body	Zinc alloy
18	Flange-OUT	Zinc alloy
19	Spring	SWPB
	O-ring	NBR

Main Dimensions

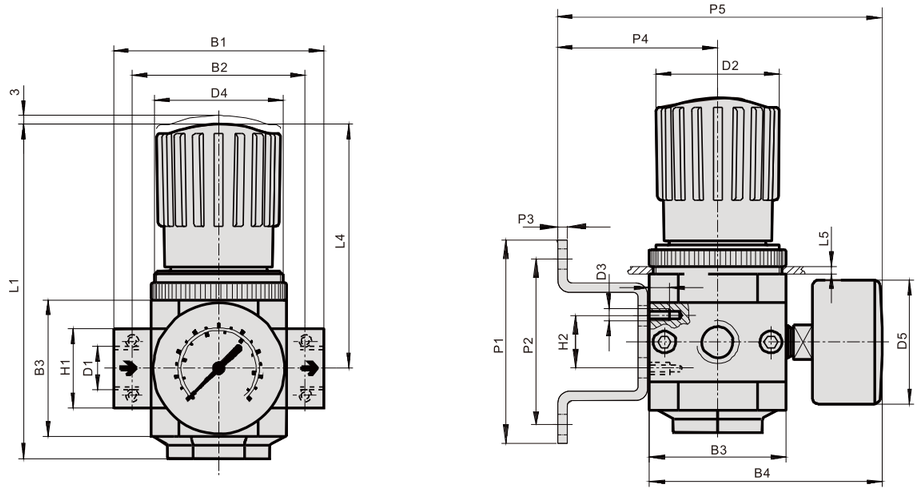

Model	B1	B2	B3	B4	D1	D2	D3	D4	D5	H1	H2	L1	L4	L5	L6	L7	T1	P1	P2	P3	P4	P5
VR-MINI-1/8″	64	52	40	76	G1/8	31	M4	M36*1.5	Φ41	20	11	96	68	3	98	60	7	43	35	2	39	95
VR-MINI-1/4″	64	52	40	76	G1/4	31	M4	M36*1.5	Φ41	20	11	96	68	3	98	60	7	43	35	2	39	95
VR-MINI-3/8″	70	52	40	76	G3/8	31	M4	M36*1.5	Φ41	20	11	96	68	3	98	60	7	43	35	2	39	95
VR-MIDI-3/8″	85	70	55	95	G3/8	50	M5	M52*1.5	Φ50	32	22	135	99	5	130	60	8	70	60	3	47	112
VR-MIDI-1/2″	85	70	55	95	G1/2	50	M5	M52*1.5	Φ50	32	22	135	99	5	130	60	8	70	60	3	47	112
VR-MIDI-3/4″	85	70	55	95	G3/4	50	M5	M52*1.5	Φ50	32	22	135	99	5	130	60	8	70	60	3	47	112
VR-MAXI-3/4″	96	80	66	107	G3/4	31	M5	M36*1.5	Φ50	32	22	125	82	4	111	60	8	70	60	3	53	124
VR-MAXI-1″	116	91	66	107	G1	31	M5	M36*1.5	Φ50	40	22	125	82	4	111	60	8	70	60	3	53	124